BHL95

TELESCOPIC BOOM
BACKHOE LOADER

19,842 LBS OPERATING WEIGHT
95 HP NET ENGINE POWER
17.6 FT MAX DIGGING DEPTH



EXTEND **YOUR**
REACH

EASY TO **OWN, OPERATE, & SERVICE**

INDUSTRY'S STRONGEST STANDARD WARRANTY | 4-YEAR* 4,000 HOURS

*Warranty applies to 2026 Backhoe Loader models.

A MACHINE BUILT AROUND YOU

In s suburban Midwest village, a municipal water line crew recently upgraded from an aging backhoe loader to the newly equipped BHL95. They were immediately impressed by the extendible stick on the backhoe, which lets them trench over 17 ft deep and reach nearly 22 ft from the swing pivot, about three feet deeper and farther than the SANY. With the 4-in-1 loader bucket and standard backhoe bucket, one machine now handles digging, grading and loading without the need for extra attachments. The operator can smooth out fill using the bucket's clamshell function, then rotate his seat and extend the backhoe to set sewer lines, saving hours compared to a fixed boom backhoe loader. Thanks to ride control, a 4WD powershift transmission with limited slip differential and a load sensing hydraulic system, the crew enjoys smooth travel between job sites and precise control while working. The climate-controlled cab, air suspension seat, and Bluetooth radio make long shifts in inclement weather a breeze. With the new front and rear two-way auxiliary hydraulic circuits, they can run the hydraulic 4-in-1 loader bucket up front and a hydraulic bucket thumb at the back without additional plumbing. Backed by SANY's 4 year/4,000-hour standard warranty and support from their local dealer, the BHL95 quickly became the crew's preferred tool.



EX EXTENDIBLE TELESCOPIC STICK

The BHL95 features a factory installed telescopic boom that extends the backhoe's reach and dig depth. Operators can dig as deep as 17′ 7″ (5,366 mm) and reach 21′10″ (6,644 mm) from the swing pivot. Compared with the SLB95's 14′ 3″ dig depth and 18′ 7″ reach, this extra reach reduces machine repositioning and allows trenching and utility work from a single setup.

VERSATILE ATTACHMENTS STANDARD FROM FACTORY

A 4-in-1 multi-purpose loader bucket and standard backhoe bucket are included from the factory. The clamshell style loader bucket can load, push, clamp and level materials, while the extendable stick delivers the digging power of a dedicated excavator. This versatility means fewer add on purchases and faster transitions between tasks.

RIDE CONTROL & TWO-WAY AUXILLIARY HYDRAULICS

The loader boom incorporates ride control (boom dampening) to reduce bounce and material spillage while traveling. The machine comes with front and rear two-way auxiliary hydraulic lines and adjustable flow, enabling operators to power hydraulic hammers, augers, brooms or compactors without aftermarket plumbing. A joystick FNR with kick down clutch and ISO/SAE pattern change make the BHL95 intuitive for operators coming from other backhoes.

PROVEN POWERTRAIN & LOAD SENSING HYDRAULICS

A 3.6-liter Deutz diesel engine delivers 95 hp (74 kW) of net power through a 4 speed powershift transmission with limited slip differential. Load sensing hydraulics with pilot controls and ISO/SAE pattern change provide smooth, precise motion for both the loader and backhoe. Wet disc brakes, outriggers with cylinder guards and flip over pads ensure confident stopping and stable digging even in rough terrain.

OPERATOR COMFORT & ERGONOMIC CAB

The spacious cab features an air suspension seat, climate control, Bluetooth radio and multiple language display for a comfortable, intuitive workspace. Eight LED work lights, a rotating beacon and traffic lights improve visibility and awareness during night operations. Large windows, slim pillars and a high-resolution instrument panel give operators excellent sightlines to both the loader and backhoe, reducing fatigue and improving productivity.

EXTENDABLE STICK

The extendible stick increases digging depth by roughly 3 ft over the SLB95 (17′ 7″ vs. 14′ 3″), allowing deeper trenches and greater reach without repositioning.

A MACHINE THAT'S EASY TO OWN

The BHL95 combines the simplicity of a loader with the capability of an excavator. Because it's built on the proven SLB95 platform, operators will find familiar controls and service points. Upgrades like the extendible stick, ride control and standard 4-in-1 loader bucket improve productivity without adding complexity. A front and rear two-way auxiliary circuit supports common attachments with adjustable flow settings, while boom float and return to dig functions speed up repetitive loader tasks. Maintenance is straightforward thanks to flip up hoods, and easy access to filters and fluid levels. With a 4 year/4,000-hour warranty and broad dealer network, the BHL95 provides reliable service and low total cost of ownership

RELIABLE FROM THE INSIDE OUT

Working long hours, protecting your crew and keeping revenue flowing, the BHL95 is built to be truly reliable—engineered to withstand thousands of hours in the toughest conditions. Its structural design handles the stress of constant blading and ditch work, while the hydraulic system delivers consistent power, force and pressure. The powertrain runs at thousands of RPM all day long to keep the hydraulic pumps working without a break. Every design choice is made to minimize downtime and maximize productivity. That's why it's backed by a 4-year/4,000-hour standard warranty—delivering reliability that doesn't compromise your schedule.



STRUCTURAL INTEGRITY

SANY doesn't skimp on steel. The BHL95 is built on a heavy-duty chassis with reinforced loader arms and an extendable backhoe boom engineered to handle the additional reach and force. Outrigger cylinder guards, flip over pads and underbody protection shield critical components from debris and impacts. The ROPS/FOPS certified cab provides rollover and falling object protection, while the limited slip differential maintains traction and delivers power in uneven terrain.

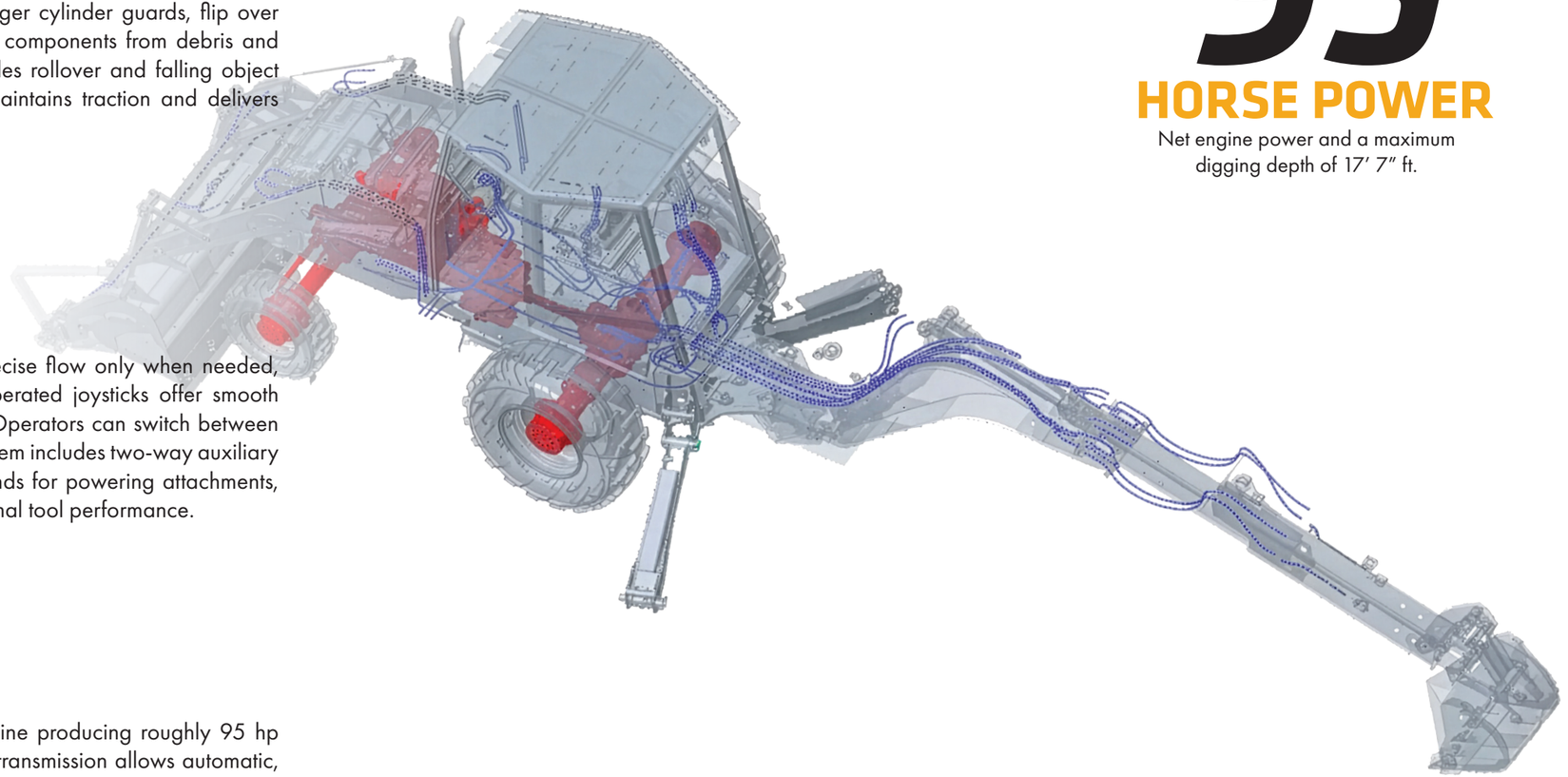

95

HORSE POWER

Net engine power and a maximum digging depth of 17′ 7″ ft.

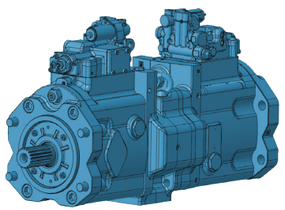

HYDRAULIC SYSTEM

The load sensing hydraulic system delivers precise flow only when needed, improving fuel efficiency and control. Pilot operated joysticks offer smooth modulation for digging, lifting and clamping. Operators can switch between ISO and SAE patterns by a single valve. The system includes two-way auxiliary hydraulics on both the loader and backhoe ends for powering attachments, and flow can be adjusted from the cab for optimal tool performance.

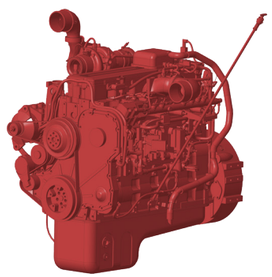

POWERTRAIN

Power comes from a reliable 3.6 L diesel engine producing roughly 95 hp and 410 Nm of torque. A 4 speed powershift transmission allows automatic, manual and kick down modes for maximum performance or fuel savings. Ride control dampens loader boom movement to keep material in the bucket while traveling, and wet disc brakes provide consistent stopping power. Four-wheel drive with a limited slip differential delivers traction on soft or uneven ground.



17+ FEATURES

specifically designed for operator and jobsite safety.

SAFETY PRIORITIZED

Safety is integrated throughout the BHL95. The machine comes with a ROPS/FOPS certified cab, a seatbelt and multiple exit points. Eight LED work lights, a rotating beacon and traffic lights enhance jobsite awareness during night work. Outrigger cylinder guards and flip over pads protect hydraulic cylinders during travel and digging. Ride control reduces boom bounce and helps prevent material spillage, while wet disc brakes provide reliable stopping. Optional backup alarms and camera systems (dealer installed) can further improve situational awareness.

BHL95

TELESCOPIC BOOM
BACKHOE LOADER

19,842 LBS OPERATING WEIGHT
95 HP NET ENGINE POWER
17.6 FT MAX DIGGING DEPTH

TECHNICAL SPECIFICATIONS

ENGINE	
Engine Model	Deutz TCD3.6 L4
Non-Road Emission Standard	EPA Final Tier 4/EU Stage V
Cylinders	4
Displacement	219.69 cu. in.
Gross Power	99 hp
Net Power	95 hp
Maximum Torque	302.4 ft-lbs @ 1,600 rpm
BorexStroke	98mm x 120mm
Compression Ratio	17.2

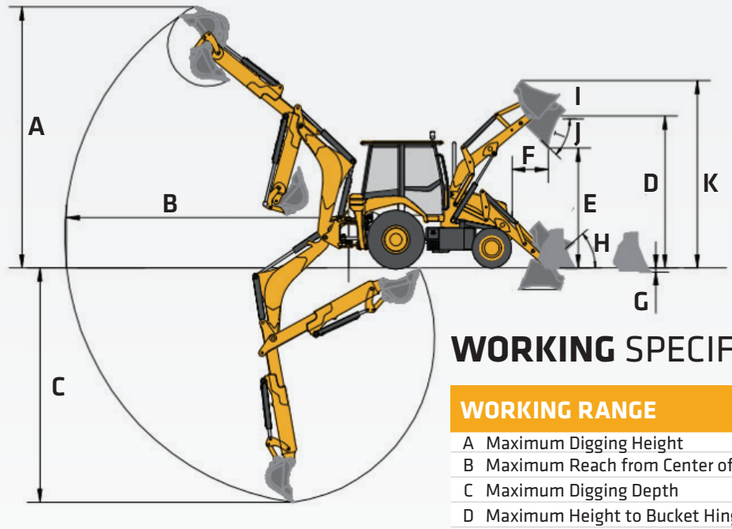

WORKING SPECIFICATIONS

WORKING RANGE		
A	Maximum Digging Height	19'8"
B	Maximum Reach from Center of Swing Pivot	21' 10"
C	Maximum Digging Depth	17' 7"
D	Maximum Height to Bucket Hinge Pin	11' 5"
E	Dump Clearance	8' 10"
F	Reach at Dump Position	2' 5"
G	Maximum Digging Depth with Bucket Leveled	3"
H	Bucket Rollback Angle @ Ground Level	40°
I	Bucket Rollback Angle @ Full Height	51°
J	Loader Dump Angle @ Full Height	44°
K	Maximum Operating Height	14' 1"

DIGGING PERFORMANCE	
Bucket Breakout Force–Excavator	12,364 lbf
Bucket Breakout Force–Loader	11,240 lbf

SANY America Inc. reserves the right to change these specifications at any time without prior notification. ©2026 SANY America Inc. HEXPS26BHL95001

BHL95

TELESCOPIC BOOM
BACKHOE LOADER

19,842 LBS OPERATING WEIGHT
95 HP NET ENGINE POWER
17.6 FT MAX DIGGING DEPTH

STANDARD FEATURES

	POWERTRAIN (ENGINE, TRANSMISSION & AXLES)
	3.6l Deutz TCD-L4 | Final Tier 4 (FT4) Certified
	Dual-element engine air filter
	ZF 4WD Powershift Transmission - 4 Speed Forward/Reverse
	FNR Transmission directional control switch on loader joystick
	Heavy duty axles with Limited Slip Differential (Rear) - Open Differential (Front)
	Parking brake, spring applied, hydraulic release
	Service brake, hydraulic power, self-adjusting wet multi-disc
	Tires (Front): 12-16.5 12PR, Tubeless
	Tires (Rear): 19.5-24 12PR. Tubeless
	HYDRAULIC SYSTEM
	Load Sensing Hydraulics with Pilot Controls
	Hydraulic valve, hydrostatic steering
	Adjustable Auxiliary hydraulic-flow
	Hydraulic valve, loader 3-function, Backhoe 8-Function
	ISO/SAE Control pattern change valve
○	One-Way (Backhoe) Auxillary Hydraulics (breaker Line)
	Two-Way (Backhoe) Auxillary Hydraulics
	Two-Way (Loader) Auxillary Hydraulics
	ATTACHMENTS & WORKING EQUIPMENT
	Telescopic Stick
	Flip-over Stabilizer Pads (Steel) and Outrigger Cylinder Guards
○	Flip-over Stabilizer Pads (Rubber) and Outrigger Cylinder Guards
	Loader Bucket, 1.0 m^3, 4-in-1 multipurpose (1.3 yd^3) | Pin-On
○	Loader Bucket, 1.0 m^3, general purpose (1.3 yd^3) | Pin-On
○	Loader bucket, bucket tooth
○	Loader bucket, bucket wear plate
	Backhoe Bucket, 0.2 m^3 (28" - 0.26 yd^3) | Pin-On
○	Backhoe Bucket, 0.3 m^3 (36" - 0.39 yd^3) | Pin-On
○	Loader Attachment Quick Coupler (Hydraulic)
○	Backhoe Attachment Quick Coupler (Manual)
○	Backhoe Hydraulic Thumb
	Loader Boom Support service lock
	Counterweight, 460 kg (1,014 lb)
	FEATURE FUNCTIONS
	Powertrain: Engine Auto-idle
	Powertrain: Transmission Clutch Cut-off Function
	Powertrain: 2WD/4WD Switch Control
	Powertrain: Kick-down on loader joystick (2nd gear to 1st gear)
	Hydraulics: Ride-control (Manual & Automatic Activation)
	Loader Feature: Bucket Float Function
	Loader Feature: Bucket Level (Return-to-Level) & Return-to-Dig

	OPERATOR'S STATION
	ROPS/FOPS Certified Cabin
○	ROPS/FOPS Certified Canopy
	Air-suspension heated seat
	AM/FM radio with USB and Bluetooth® connectivity (Cab Only)
	Automatic HVAC climate control; air conditioning & heat (Cab Only)
	Seat belt (3 inch, retractable lap-belt)
	Auxiliary (12V) Power Socket/Outlet
	Heavy duty rubber floor mat
	Interior cabin light
	Cup Holder
	Hour meter (In Electronic display)
	Horn (Loader Steering Column & Backhoe Joystick Activated)
	Front and rear windshield wiper with variable speeds
	Built-in operator's manual storage compartment
	Loader Steering , Adjustable Steering wheel: Column Tilt
	Backhoe joystick, adjustable tilt
	LCD Display - Digital Guauges: DEF, Fuel level, Engine speed, & engine coolant temp.
	System monitoring with alarm: Fuel Filter; engine air filter; transmission & engine Temp.
	Ignition password protection (Operator Code)
	Motion alarm (conforms to SAE J994)
	Reverse alarm
	ELECTRICAL
	12V System (1x 12V 165ah 850-CCA Battery)
	120-amp alternator
	Ground level electrical battery disconnect (lockout tag-out)
	VISIBILITY (LIGHTS & MIRRORS)
	LED Work lights: 4 front and 4 rear
	Roof-mounted beacon light
	Rear-view mirror (Inside operator station)
	Rear-view mirror (External)
	Loader Linkage mirror (External)

"•" Optional

OTHER SPECIFICATIONS

WEIGHT	
Operating Weight	19,842 lbs
TRANSMISSION	
Manufacturer	ZF
Type	4WD Powershift
Shift Modes	4 Speed Forward/Reverse
Speed Gear 1	3 mph
Speed Gear 2	6 mph
Speed Gear 3	12 mph
Speed Gear 4	22 mph
Speed ratio of front axle	13.125
Speed ratio of rear axle	19.911
front tires	12–16.5 12PR
rear tires	19.5–24 14PR
Front tire pressure	79.8 psi
Rear tire pressure	33.4-33.7 psi
HYDRAULIC SYSTEM	
Hydraulic System Type	Load Sensing with Pilot Controls
Main Hydraulic Pump (Type)	Variable Displacement-Axial Piston
Hydraulic Power	39 kW @ 2,200 rpm
System Flow	41.21 gpm
Operating Pressure	3611.4 psi
One-way Aux Line (Max Flow)	36.98 gpm
One-way Aux Line (Max Pressure)	2320.6 psi
SERVICE REFILL CAPACITIES	
Fuel Tank Capacity (Diesel)	37.0 gal
DEF Tank Capacity	3.2 gal
Hydraulic Oil Capcity	31.7 gal
Engine Oil Capacity	2.2 gal
Cooling System Capacity	6.1 gal
Transmission Oil Capacity	4.8 gal
Front Axle Oil Capacity (Middle)	1.7 gal
Front Axle Oil Capacity (Left/Right)	0.2 gal
Rear Axle Oil Capacity (Middle)	4.8 gal
Rear Axle Oil Capacity (Left/Right)	0.4 gal

In the interest of continual equipment development, SANY America Inc. reserves the right to change these specifications at any time without prior notification.
©2026 SANY America Inc. HEXPS26BHL95001

In the interest of continual equipment development, SANY America Inc. reserves the right to change these specifications at any time without prior notification.
©2026 SANY America Inc. HEXPS26BHL95001

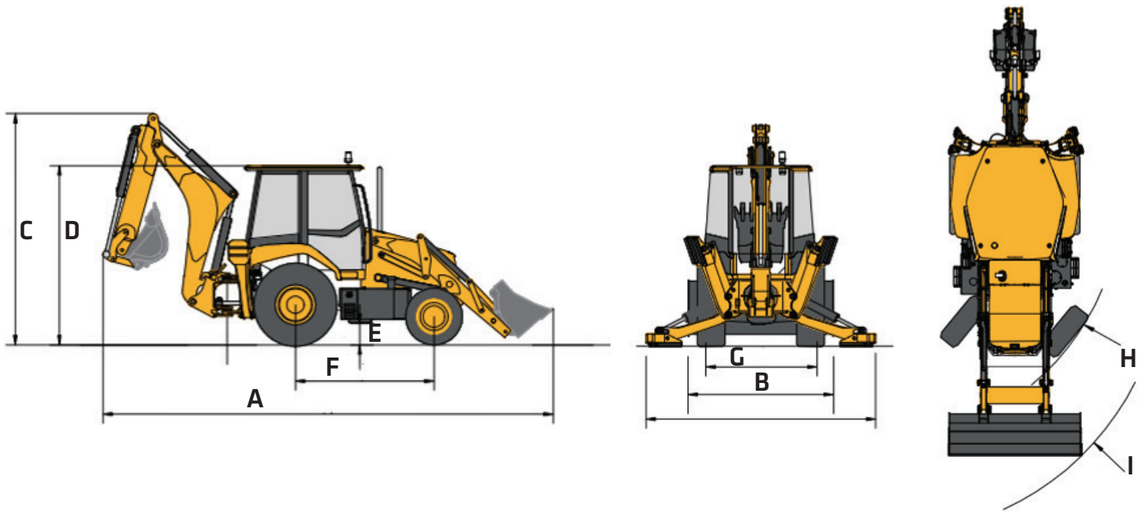

DIMENSIONS		
A	Maximum length (transport)	24’ 3”
B	Maximum width (transport)	7’ 6”
C	Maximum height (transport)	12’ 3”
D	The top of the cab height	10’ 3”
E	Ground clearance (transmission)	1’ 1”
F	Wheelbase (Axle to Axle)	7’ 4”
G	Wheelbase (Width - Middle Tire), Rear	5’ 11”
H	Turning radius (outside of the front tires)	13’ 11”
I	Turning radius (outside of the bucket)	15’ 9”
–	Stabilizer Overall Width	11’ 5”

In the interest of continual equipment development, SANY America Inc. reserves the right to change these specifications at any time without prior notification.
©2026 SANY America Inc. HEXPS26BHL95001

INDUSTRY’S STRONGEST STANDARD WARRANTY | 4-YEAR* 4,000 HOURS

*Warranty applies to 2026 Backhoe Loader models.

SANY America Inc. 318 SANY Way
Peachtree City, Georgia 30269
470.552.SANY sanyamerica.com

CONNECTED, **INFORMED**, IN CONTROL
TECHNOLOGY

CONNECTED EVI TELEMATICS

EVI is SANY’s proprietary telematics platform and is available through your local dealer. This dashboard lets you track and geofence the machine, view reports on consumption and run time, monitor error codes and manage your SANY fleet, all with more features continually being launched to keep you connected and in control.

HIGH-RESOLUTION INSTRUMENT PANEL

The BHL95 features a modern instrument panel with a high-resolution digital display that supports multiple languages and provides clear readings of engine speed, fuel level and hydraulic status among other critical machine operational status readings. Operators can enter a password to start the engine, adding a layer of security.

ADJUSTABLE HYDRAULIC CONTROLS

Electric over hydraulic joysticks allow operators to adjust auxiliary flow from the cab, tailoring performance for different attachments. The ISO/SAE pattern change simplifies switching between control schemes. Integrated ride control smooths out loader travel, while the boom float function lets the bucket follow the ground contour, ideal for finish grading and snow removal.





12
POINTS
of heated seat adjustablity.

DESIGNED FOR **COMFORT** ALL SHIFT LONG

This spacious cab is built for comfort and intuitiveness with safety and ergonomics at the core. The adjustable seat allows each operator to achieve their ideal position, plus the heated and air-suspension functions for all-day comfort. The BHL95`s digital display places common gauges and hydraulic adjustments within easy reach. The enclosed cab is equipped with a standard heating and air-conditioning system to maintain optimal comfort regardless of external conditions. In addition, Bluetooth connectivity allows for reliable hands-free communication. Large cabin glass panels and additional exterior mirrors maximize visibility of the work area, helping operators stay confident and productive throughout the shift.

BUILT **AROUND THE** OPERATOR

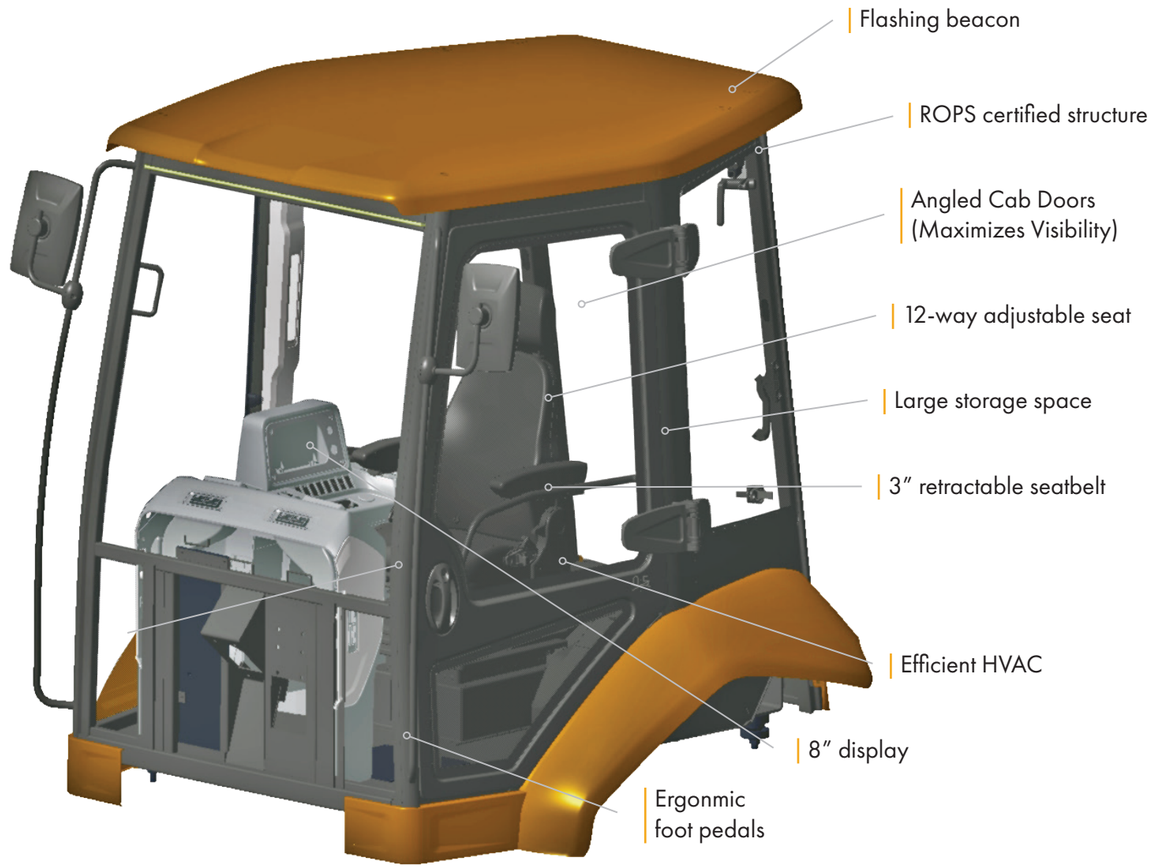

CUSTOM OPERATOR ERGONOMICS

The cab is designed around the operator. A heated, air suspension seat with armrests absorbs vibration and adjusts to fit operators of all sizes. The steering column and joysticks tilt for operator comfort, while intuitive joysticks with FNR switches reduce hand movement. Climate control and Bluetooth connectivity keep the cab comfortable and connected during long shifts.

OPTIMAL JOBSITE AWARENESS

Large glass areas and slim cab pillars provide excellent sightlines to the loader bucket and backhoe. LED work lights and a rotating beacon illuminate the work area and warn bystanders. The extendible stick's design maintains visibility of the digging edge at full extension, helping operators dig precisely even in deep trenches. Optional mirrors or camera systems can be added to further enhance situational awareness.

INTENTIONALLY **ENGINEERED** FOR SERVICE

UPTIME IS OUR PRIORITY

With fast diagnostics, streamlined repairs and software tools for remote support it's easy to keep your SANY machine running strong. Our local dealer network, stretching across North America, provides quick response and maximizes your productivity.

DEDICATED TO SUPPORT

We're expanding our U.S. footprint with local engineering, quality assurance and service teams, backed by a multi-year investment in support, training, and parts.

EASE OF ACCESS

Its spacious compartments offer ample room for tools, filters, and components, ensuring efficient inspections and replacements that minimize downtime on the job site.

FAST DAILY PRE-CHECKS

Machines are designed so operators can safely and easily inspect critical systems, mostly from the ground, for quick visual and manual checks.

PARTS ON THE SHELF READY TO SHIP

We continually expand parts inventory across our major North American distribution centers and improve forecasting to keep high-demand components in stock. This long-term strategy ensures critical parts are ready to ship when they're needed most.





#1 FASTEST
GROWING
support network in North America.



WE'VE GOT **YOUR BACK**

At SANY, we see every customer as a relationship whose success is directly tied to ours. We focus on keeping you productive, because when your machines are running, your business is winning. Our warranty support, faster claim approvals, not just our equipment. Your feedback fuels continuous improvement, real updates to software, hydraulics, and performance through close collaboration with key suppliers. With expanding U.S. support, trained technicians, ongoing investments, and stronger parts availability, we stay by your side so your business can keep moving forward.



CUSTOMERS FIRST ALWAYS

At SANY America, everything begins with you. We design machines that make your work safer, more efficient, and more profitable—and we stand behind them with U.S.-based support you can count on. From ergonomic cabs and superior visibility to quick daily checks and dependable uptime, every feature is engineered around real operator needs and real jobsite demands. Your feedback directly drives our product improvements, accelerating software updates, hydraulic refinements, and long-term durability enhancements. With expanding American facilities, local engineering and service teams, certified technicians, and three parts distribution centers nationwide, we operate as your committed business partner—focused on your success today and every day ahead.

INDUSTRY'S **STRONGEST** STANDARD WARRANTY

SANY America delivers the most comprehensive standard warranty in the industry—protecting your investment from day one.

- **4 years / 4,000 hours of full machine coverage included with every Backhoe Loader**
- **Lower total operating risk and fewer unexpected costs over machine life**
- **Confidence in long-term durability backed by factory engineering and testing**
- **Stronger coverage than leading OEM competitors – standard, not add-on**

Choosing SANY means choosing equipment built to work—and a partner committed to standing behind your success.

FINANCING THAT WORKS AS HARD AS YOU DO

Smart financing that makes owning SANY equipment faster, easier, and affordable.

- **Quick approvals – many customers approved in under 5 minutes**
- **Simple mobile app for secure document signing and easy payment management**
- **Flexible terms and competitive promotions, including 0% for 60 months**
- **Faster approvals for repeat customers to keep your fleet growing**
- **Top-rated experience with a 4.95 out of 5 Trustpilot score**

Financing with SANY is built to support your business growth every step of the way.

TOTAL COST OF OWNERSHIP

SANY machines are engineered to deliver a stronger return on investment by lowering the true cost of ownership over the life of your equipment.

- **Fuel-efficient performance reduces operating costs every hour the machine runs**
- **Extended service intervals minimize downtime and maintenance expense**
- **Parts cost management keeps replacement and wear items affordable**
- **High resale value helps protect your investment over time**
- **More standard features from the factory reduce the need for costly add-ons**

Every detail is designed to help you earn more, spend less, and get maximum value from every machine you own.



*Warranty applies to 2026 backhoe loader models.

SANY America Inc.
318 SANY Way
Peachtree City | GA 30269
T | 470-552-SANY

BRHEX26BHL95001

sanyamerica.com

In the interest of continual equipment development, SANY America Inc. reserves the right to change these specifications at any time without prior notification.

© 2026 SANY America Inc.